City of Fairfax, Virginia

Typical Retaining Wall Details

Based on the 2015 International Residential Code

Typical Retaining Wall Detail Based on the 2015 International Residential Code www.fairfaxva.gov	This design document applied to residential, no-tiered, non-stacked retaining walls with level backfill and no surcharge loading that retains no more than 4 feet of earth. Retaining walls must be constructed in conformance with the details herein. A copy of these details is required to be on the job site and available to the inspector during each required inspection.
City of Fairfax, VA 10455 Armstrong Street Fairfax, VA 22030 Code Administration: 703-385-7830	Homeowner's Association pre-approval and a Grading Permit may be required. Please contact Zoning for further information, 703-385-7820.

CONTENTS

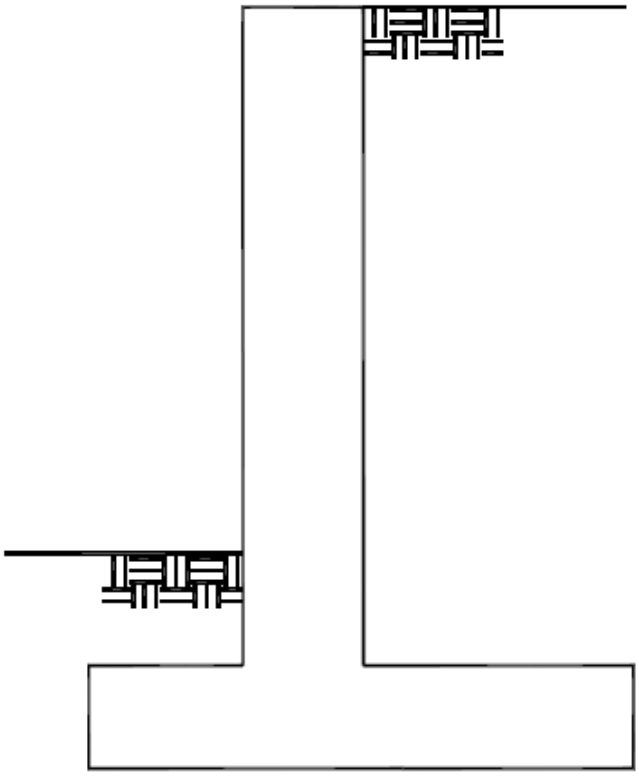

Section Page

1 General Notes…….3

2 Timber Wall Construction……..3

3 Masonry Wall Construction……..4

4 Concrete Wall Construction……5

5 Vertical Joints……..5

6 Backfill and Drainage……..6

SECTION 1: GENERAL NOTES

1. Timber retaining walls shall be constructed in accordance with the following:

- Lumber shall be 6x6, southern pine, grade #2 or better and preservative-treated in accordance with American Wood Preservers' Association standards for ground contact.
- All spikes shall be 60d or equivalent, hot-dipped galvanized or stainless steel and driven in pre-drilled holes. Spikes shall be of sufficient length to penetrate the base member a minimum of 2 inches.

2. The minimum concrete compressive strength at 28 days shall be 3,500 psi and shall comply with ACI 318.

3. Reinforcing steel shall comply with ASTM A615 and shall have a yield strength of 60,000 psi.
4. Lap all reinforcing steel a minimum of 20 inches.
5. Masonry retaining walls shall be constructed in accordance with the following:

- Concrete masonry blocks shall comply with ASTM C90.
- All joint reinforcement, ties and other accessories shall be resistant to corrosion.
- All heads and bed joints shall be 3/8-inch thick.
- Bed joints of the starting course over the concrete foundation may be between ¼-inch and ¾-inch.
- Mortar shall conform to ASTM C270.

SECTION 2: TIMBER WALL CONSTRUCTION

Wall construction. The construction of a timber retaining wall shall conform to the requirements shown in Figure 1. Deadmen shall be placed at 8 feet on center. Deadmen and cross plates shall be constructed as shown in Figure 2. Deadmen are not required in the top course or bottom course below grade.

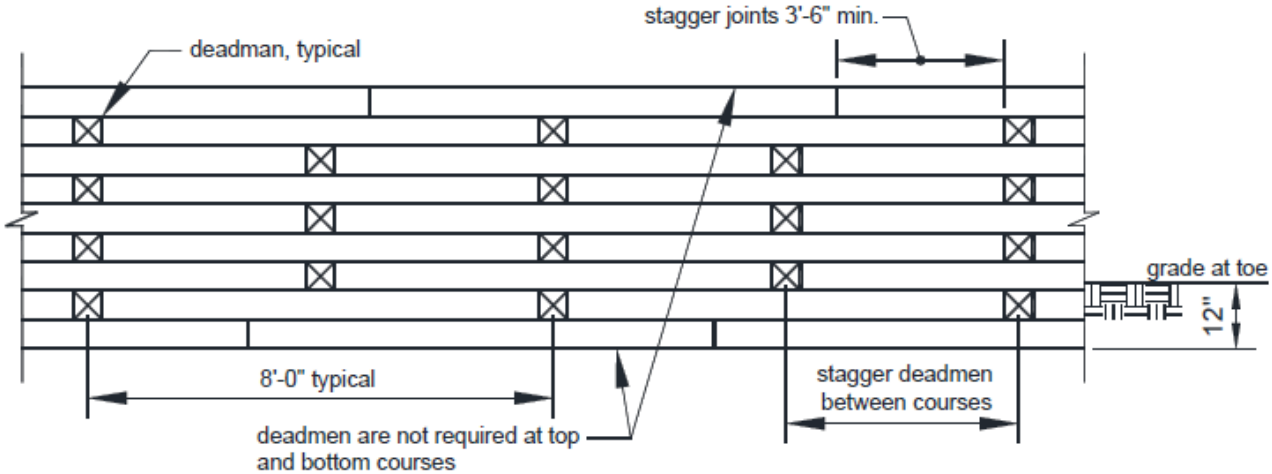

FIGURE 1: TYPICAL TIMBER WALL ELEVATION

Fasteners and connections. Each 6x6 member shall be secured at each end with 2-60d spikes driven vertically into the member below. Corners shall be secured with 2-60d spikes and driven horizontally. See Figure 2 for more information.

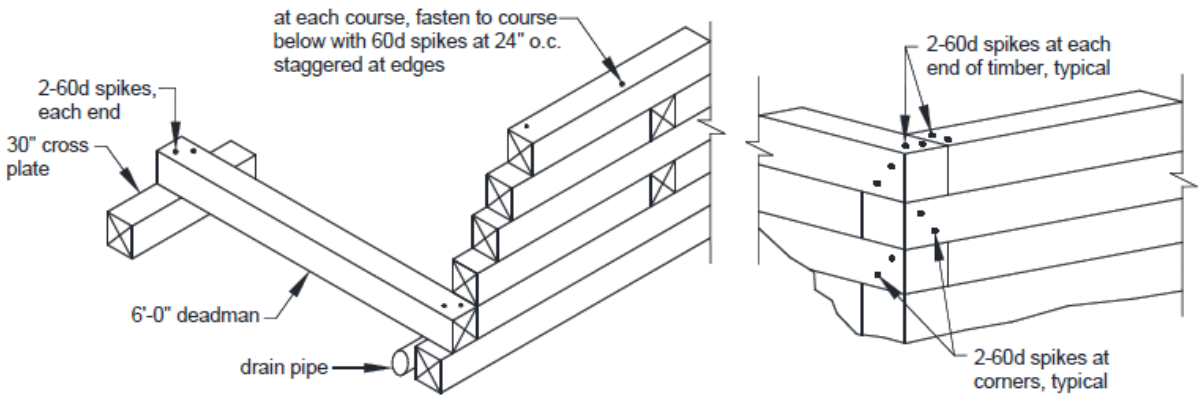

FIGURE 2: TYPICAL FASTENERS FOR TIMBER RETAINING WALLS

SECTION 3: MASONRY WALL CONSTRUCTION

Wall construction. The construction of a concrete masonry retaining wall shall conform to the dimensions and reinforcing steel requirements shown in Figure 3 and Table 1. O-bars and corresponding dowels may be substituted with a single, full-height bar of equal size and spacing.

Bond beam and reinforcement. A bond beam shall be provided at the top course and at intermediate courses below as shown in Figure 3. Bond beams shall be constructed using the block types shown in Figure 4. Vertical and horizontal steel placement shall be in accordance with Figures 5 and 6.

TABLE 1: MASONRY WALL REQUIREMENTS

H	W	O-bars/dowels	P-bars
24"	39"	#4@56"	#4@48"
36"	48"	#4@32"	#4@48"
48"	63"	#4@16"	#4@30"

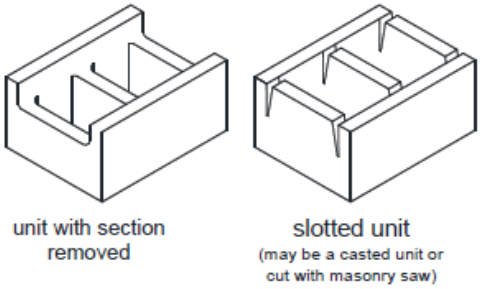

FIGURE 4: BOND BEAM BLOCK TYPES

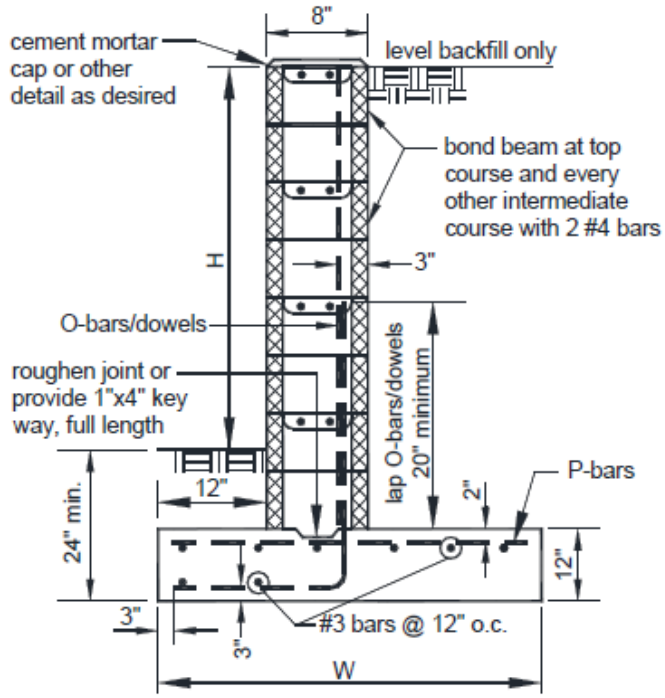

FIGURE 3: TYPICAL MASONRY WALL SECTION

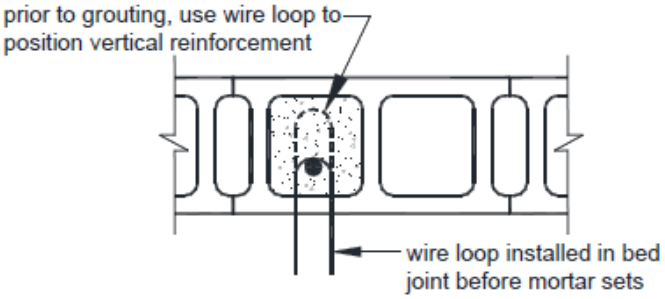

FIGURE 5: VERTICAL REINFORCEMENT TIE-HOLD DETAIL

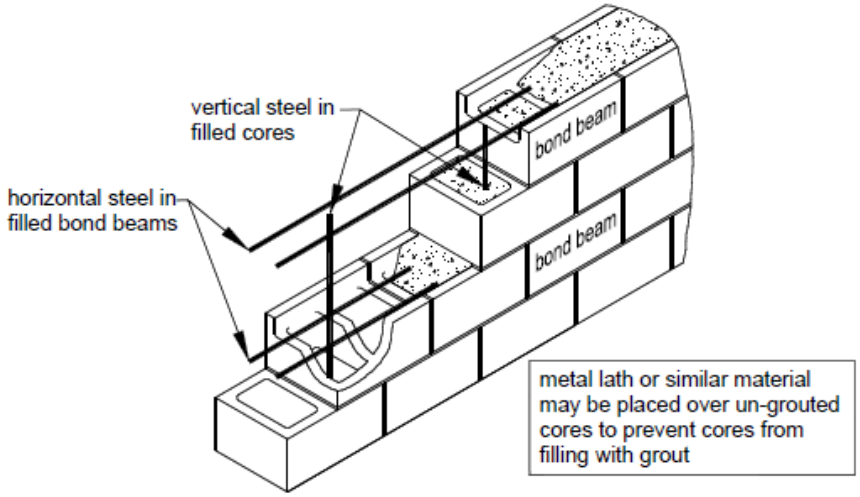

FIGURE 6: TYPICAL WALL REINFORCEMENT DETAIL

SECTION 4: CONCRETE WALL CONSTRUCTION

Wall construction. The construction of a concrete retaining wall shall conform to the dimensions and reinforcing steel requirements shown in Figure 7 and Table 2. O-bars and corresponding dowels may be substituted with a single, full-height bar of equal size and spacing.

TABLE 2: CONCRETE WALL REQUIREMENTS[1]

H	W	O-bars/dowels	P-bars
24"	39"	#4@13"	#4@8"
36"	48"	#4@13"	#4@8"
48"	60"	#4@13"	#4@8"

[1]Reference: Concrete Reinforcing Steel Institute

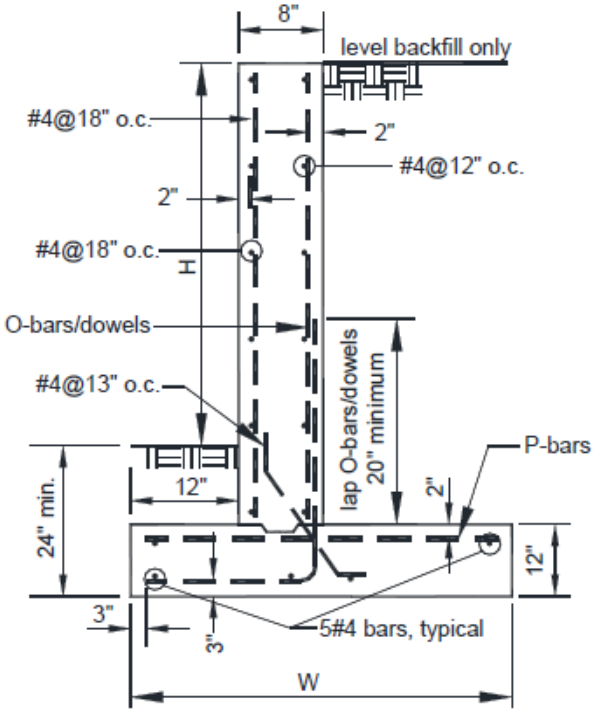

FIGURE 7: TYPICAL CONCRETE WALL SECTION

SECTION 5: VERTICAL JOINTS

Vertical joints. Control joints, constructed per Figure 8 for masonry and Figure 10 for concrete, shall be placed no more than 20 feet on center. Expansion joints, constructed per Figure 9 for masonry and Figure 11 for concrete, shall be placed at every fourth control joint.

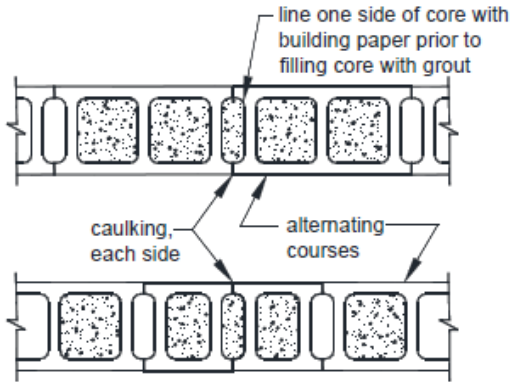

FIGURE 8: MASONRY CONTROL JOINT DETAIL

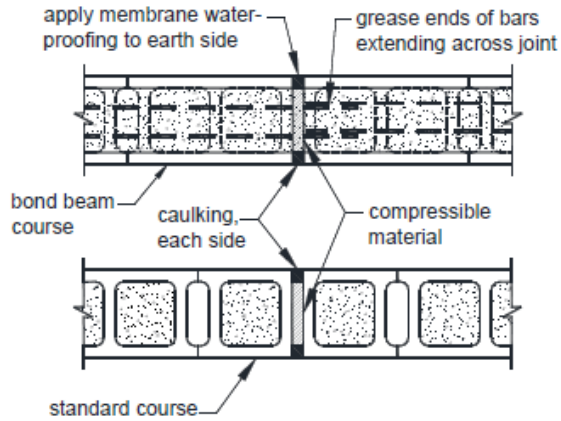

FIGURE 9: MASONRY EXPANSION JOINT DETAIL

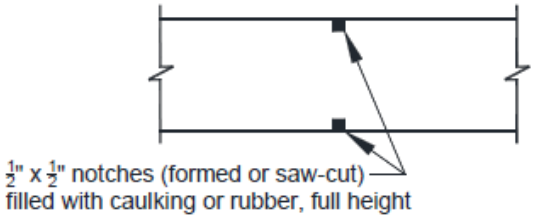

FIGURE 10: CONCRETE CONTROL JOINT DETAIL

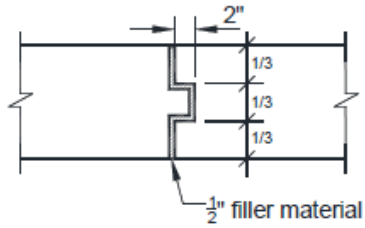

FIGURE 11: CONCRETE EXPANSION JOINT DETAIL

SECTION 6: BACKFILL AND DRAINAGE

Backfill and drainage. Backfill and drainage requirements shall be in accordance with Figure 12 for timber retaining walls and Figure 13 for masonry and concrete retaining walls. Backfilling against masonry or concrete retaining walls shall not be permitted until at least seven days after placing concrete or grout. Heavy equipment shall maintain a distance away from the wall equal to the wall's height. Care shall be taken to avoid exerting large impact forces on the wall.

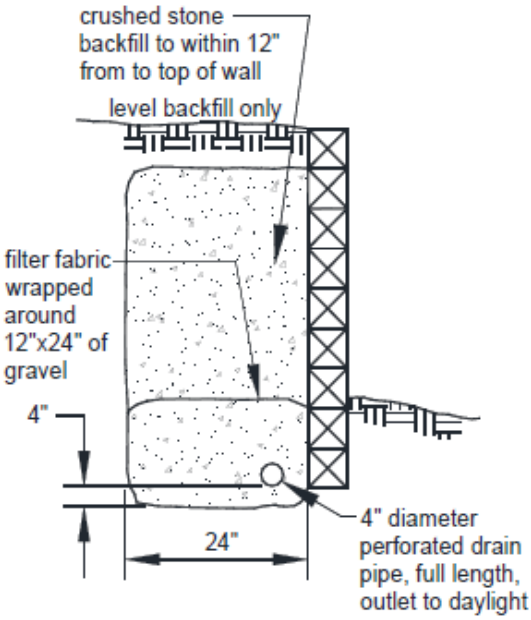

FIGURE 12: TIMBER WALL BACKFILL AND DRAINAGE

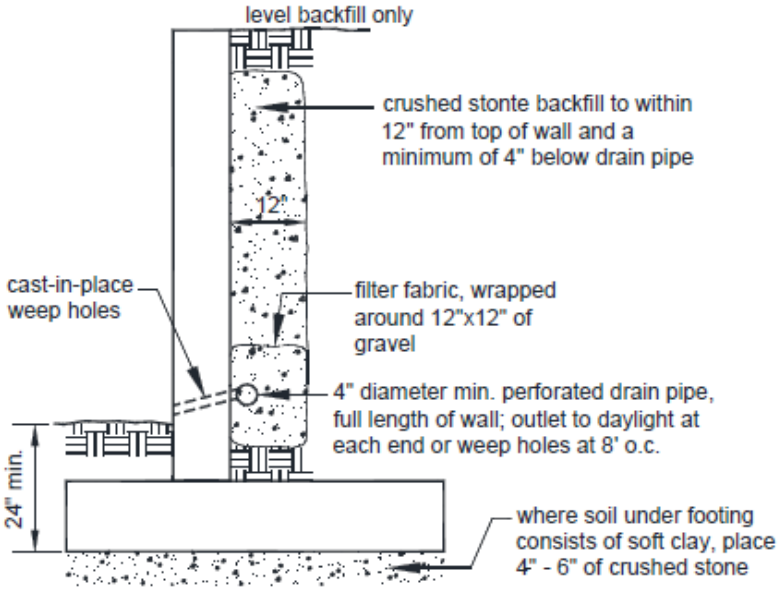

FIGURE 13: MASONRY, CONCRETE WALL BACKFILL AND DRAINAGE